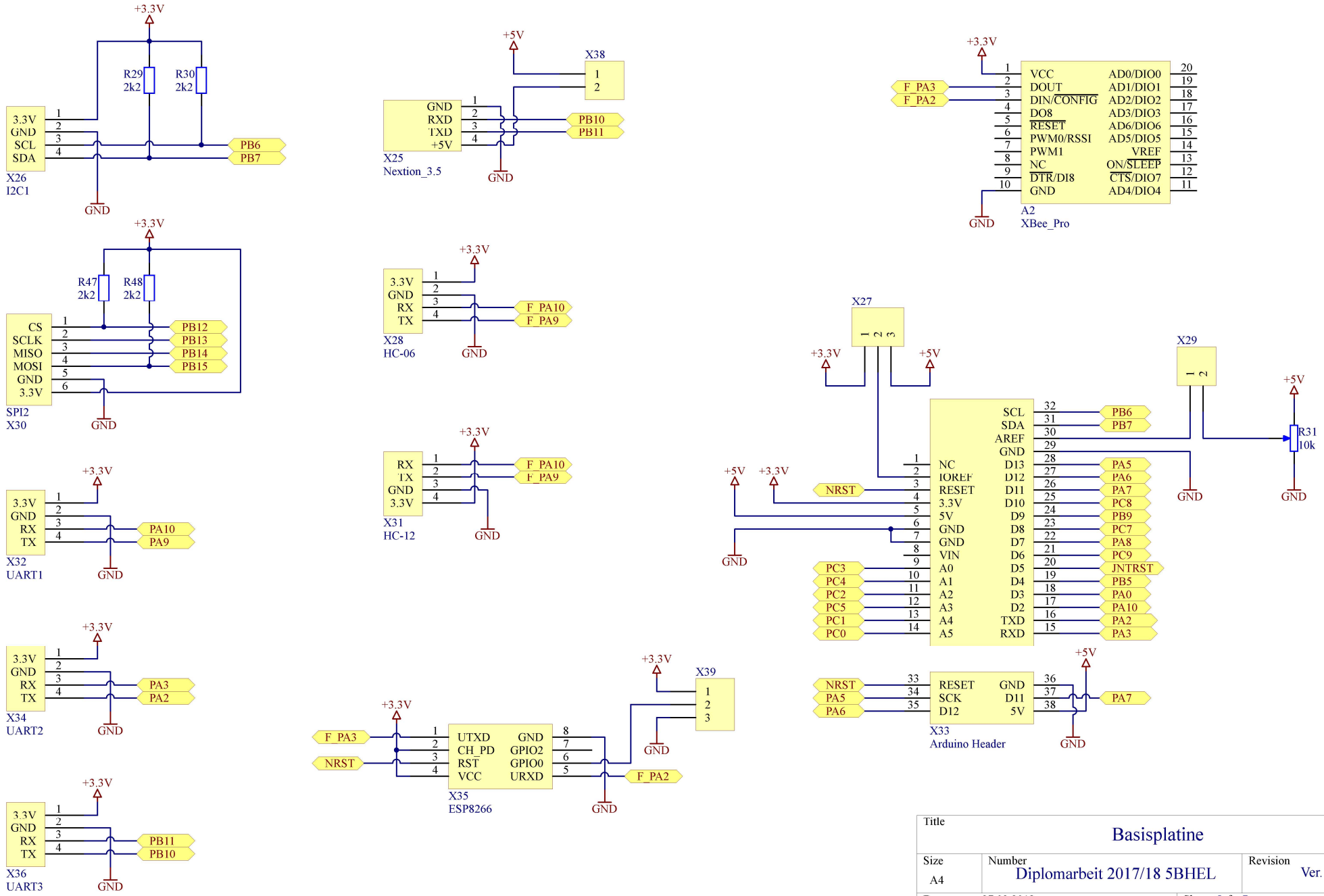

Title	Basisplatine	
Size A4	Number Diplomarbeit 2017/18 5BHEL	Revision Ver. 3.0
Date: 27.03.2018	Sheet 5of 7	
File: D:\Desktop\..\ARM_EURO_Platine5.SchDoc	Drawn By: Schuh Kevin	